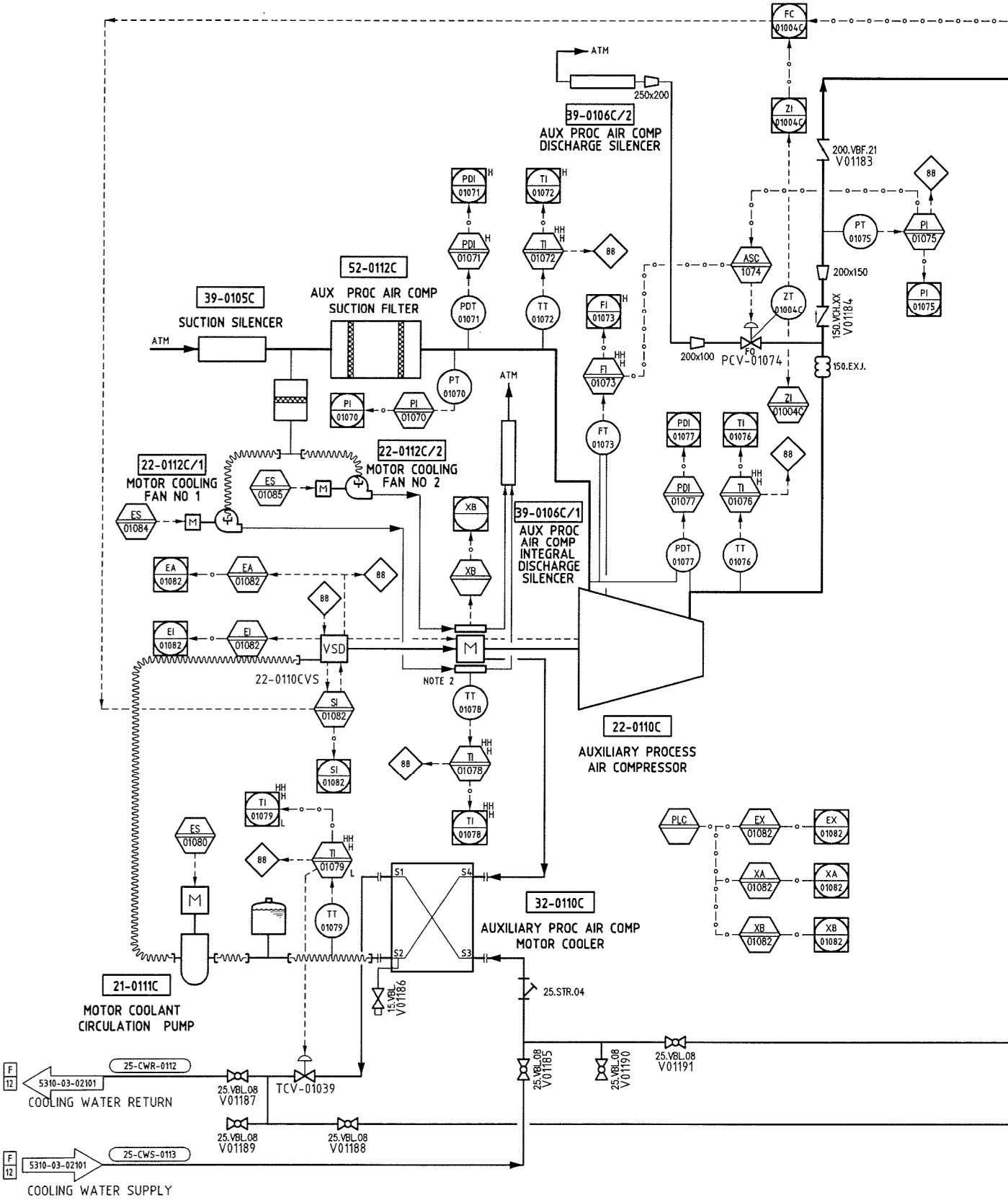
ATM
250x200
39-0106C/2
AUX PROC AIR COMP
DISCHARGE SILENCER
FC 01004C
ZI 01004C
200.VBF.21
V01183
PDI 01071
TI 01072
PDT 01071
TT 01072
88
PT 01075
PI 01075
ASC 1074
200x150
52-0112C
AUX PROC AIR COMP
SUCTION FILTER
39-0105C
SUCTION SILENCER
ZT 01004C
150.VCH.XX
V01184
FI 01073
FT 01073
200x100
PCV-01074
FO
150.EXJ.
PT 01070
PI 01070
PDI 01077
TI 01076
PDT 01077
TT 01076
22-0112C/1
MOTOR COOLING
FAN NO 1
ES 01085
M
22-0112C/2
MOTOR COOLING
FAN NO 2
ES 01084
XB
39-0106C/1
AUX PROC
AIR COMP
INTEGRAL
DISCHARGE
SILENCER
EA 01082
EI 01082
VSD
22-0110CVS
NOTE 2
SI 01082
TT 01078
TI 01078
22-0110C
AUXILIARY PROCESS
AIR COMPRESSOR
TI 01079
TT 01079
ES 01080
PLC
EX 01082
XA 01082
S1
S2
S3
S4
32-0110C
AUXILIARY PROC AIR COMP
MOTOR COOLER
15.VBL
V01186
25.STR.04
21-0111C
MOTOR COOLANT
CIRCULATION PUMP
F 12
5310-03-02101
25-CWR-0112
COOLING WATER RETURN
25.VBL.08
V01187
TCV-01039
25.VBL.08
V01185
25.VBL.08
V01190
25.VBL.08
V01191
25.VBL.08
V01189
25.VBL.08
V01188
25-CWS-0113
COOLING WATER SUPPLY